#181 MZP High School Theater

General Layout [27 Sep 01]

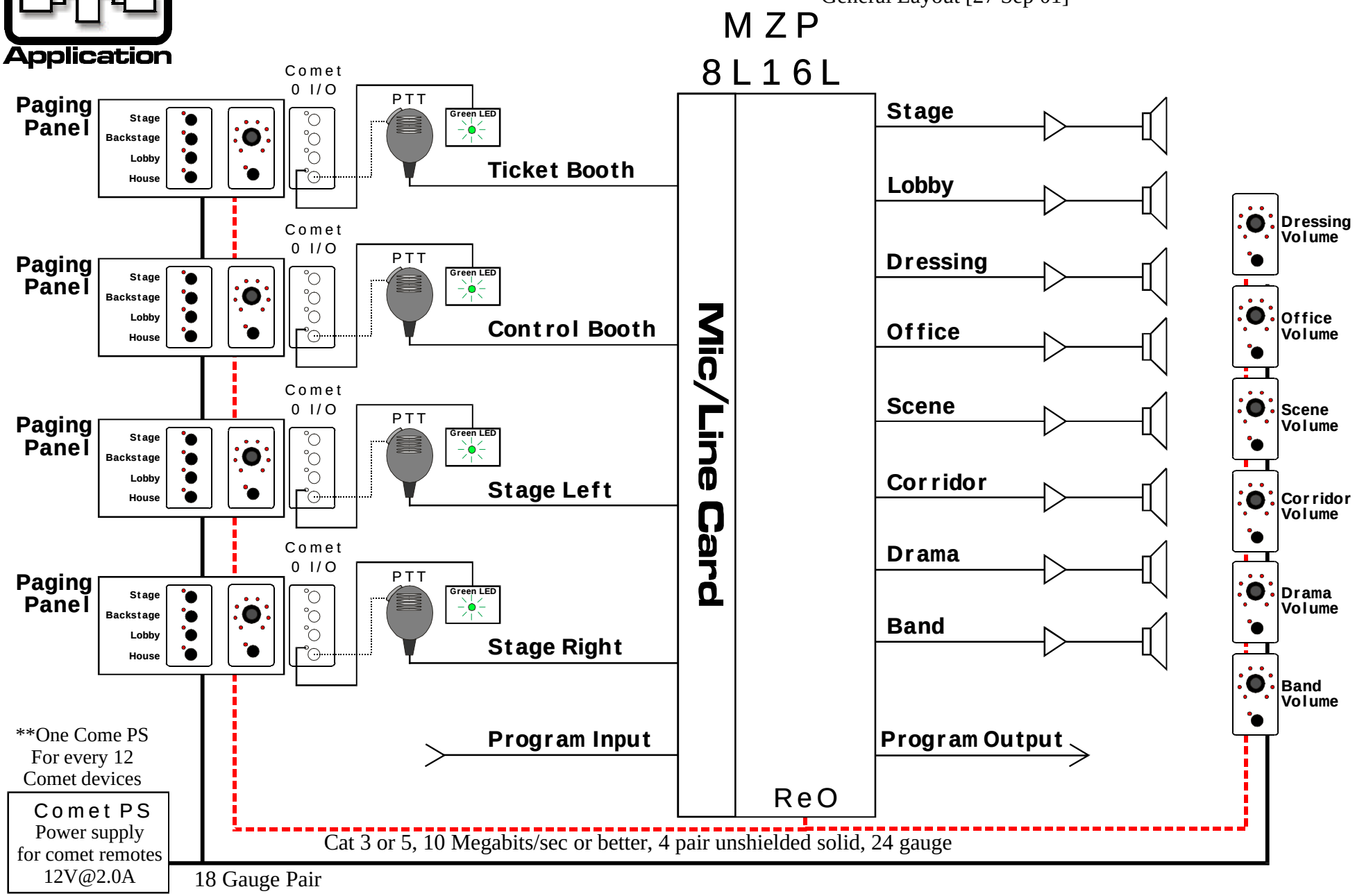

www.intelix.com intelix@intelix.com 608.831.0880 fax 608.831.1833