#150 MARC Hotel w/ RC5 Row Panel

Application

General Layout [01/02/01]

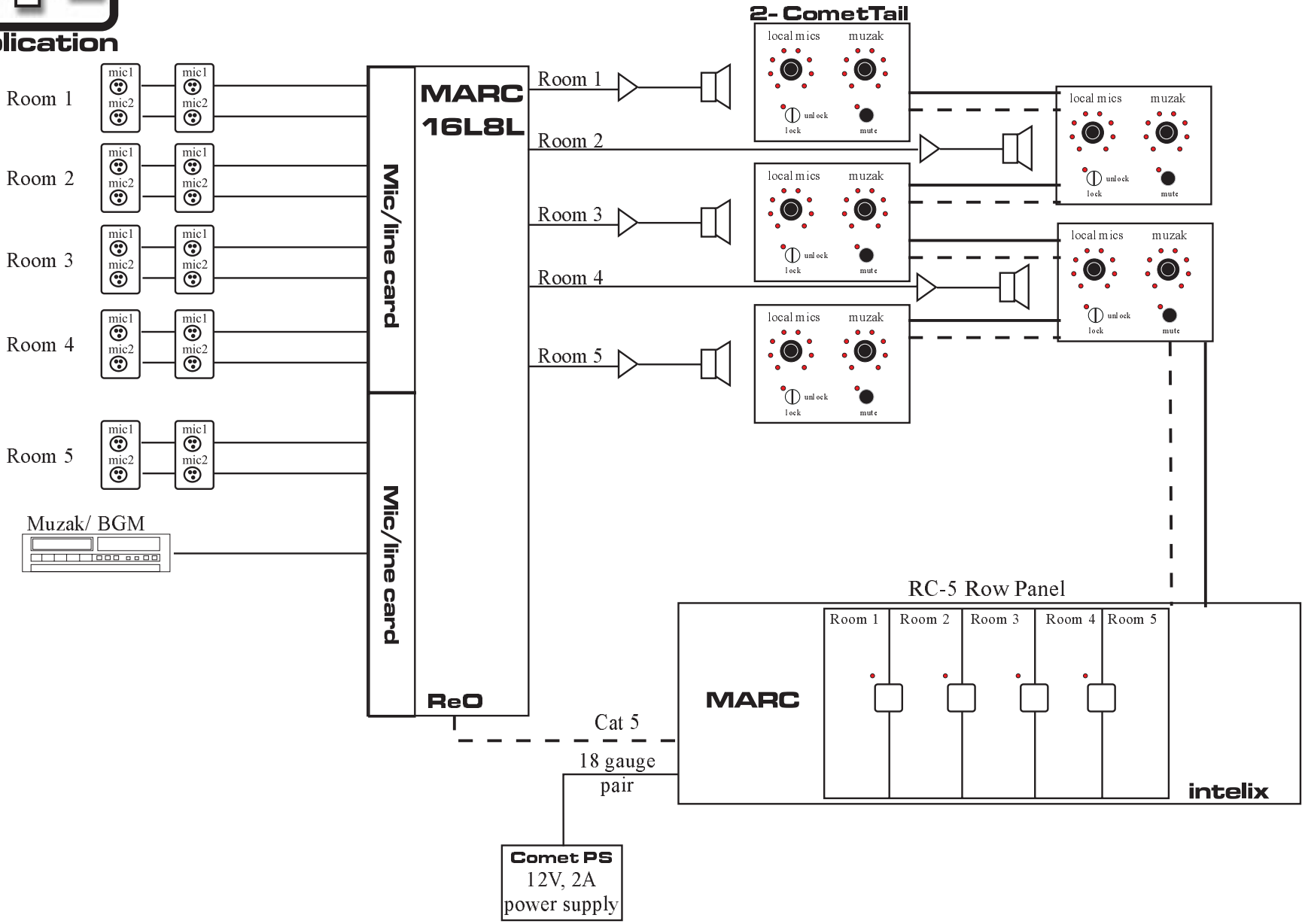

www.intelix.com intelix@intelix.com 608.831.0880 fax 608.831.1833