#135 MARC 2-Room Combine

Application

intelix DESIGN WITH INTELLIGENCE

General Layout [10/23/00]

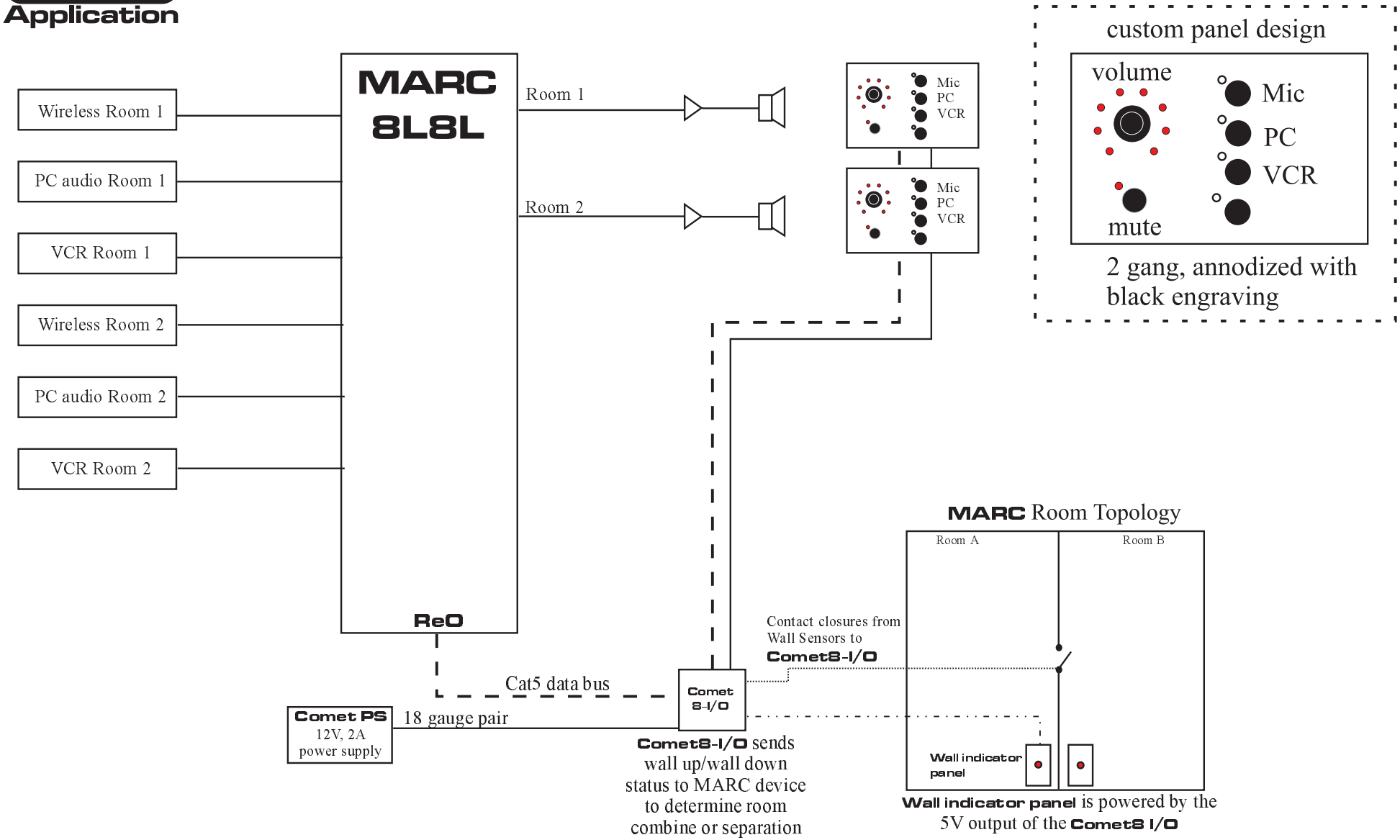

www.intelix.com intelix@intelix.com 608.831.0880 fax 608.831.1833