#108 MZP 500,000 sq. ft. Recreation Center

Application

intelix
DESIGN WITH INTELLIGENCE

General Layout [08/24/00]

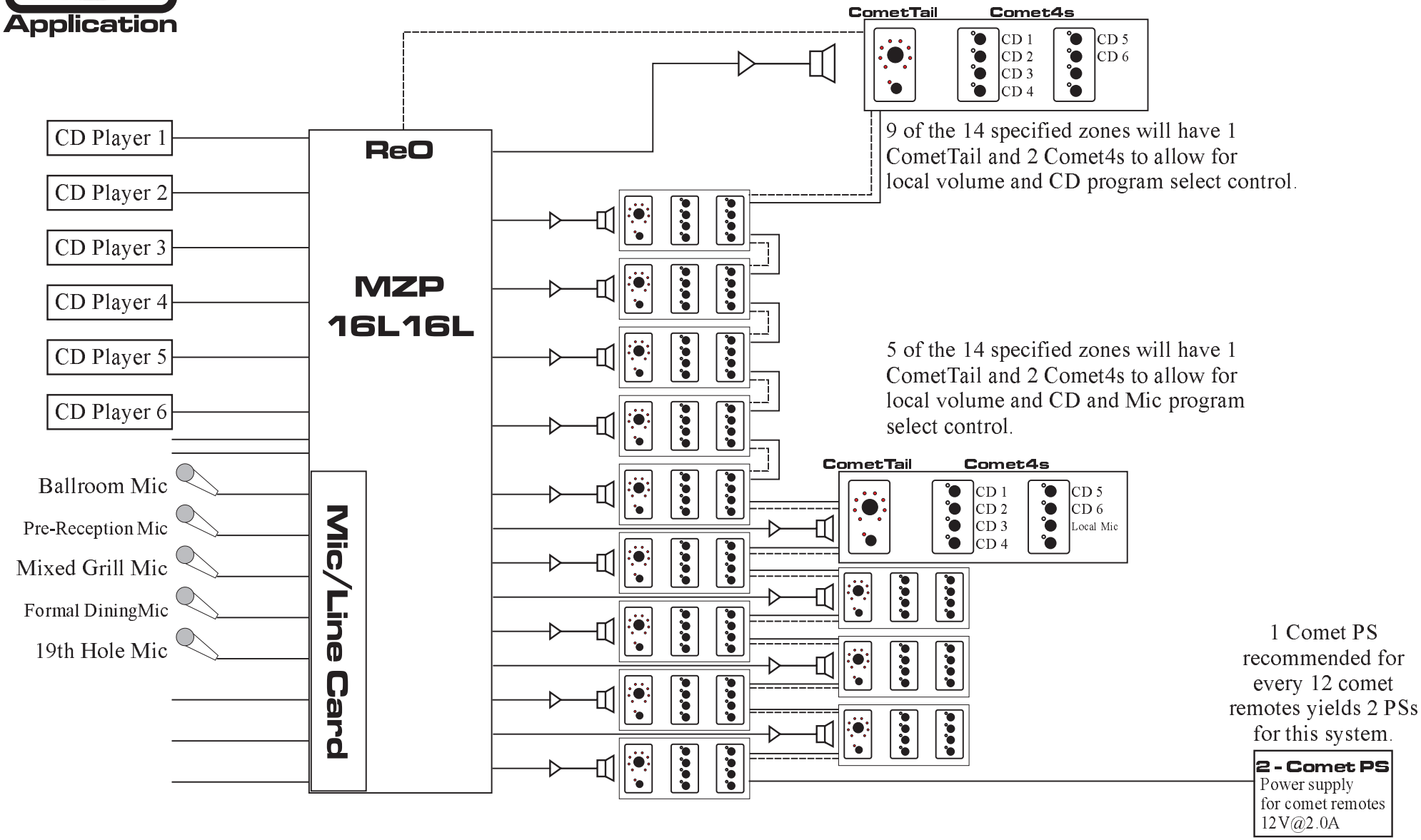

www.intelix.com intelix@intelix.com 608.831.0880 fax 608.831.1833